BLUE SQUARE®

PRODUCT CATALOG

2022

INNOVATIVE POOL EQUIPMENT

Having started his career as a pool service tech for ten years before becoming a pool builder, the founder of Blue Square, Tim Murphy, had long aspired to develop and manufacturer better, more efficient pool equipment. Through his many years of experience, Tim developed the Q360+ in-floor cleaning system, which included the Q360+ Actuator Valve. This 6-port valve tied into the variable speed pump, unique at the time, and worked on water flow, not pressure. His continued passion to develop innovative pool equipment is what made Blue Square Manufacturing what it is today. As Blue Square has grown, we now manufacture in-floor cleaning systems, new and replacement LED pool lighting, modern pool drains, and more. As we continue to grow and develop, we will continue to stay true to our founder and manufacture the industry's most innovative pool equipment.

From LED pool & spa lights with patented plug kits to the Eclipse Drain and Q360+ In-Floor cleaning system, Blue Square is known for manufacturing some of the industry's most innovative pool equipment.

Q360™+

Spectrum™ 360

Vivid 360 POOL REPLACEMENT LED

Eclipse™ Drain

Abyss™ Containment Canister

R360™

BLUE SQUARE

Table of Contents

1.0 In-Floor Cleaning....1
1.1 Performance Jets....2
1.2 Jet Collars....2
1.3 Jet Parts....3
1.4 Valves....4
1.5 Valve Replacement Parts....5
1.6 Abyss Canister Complete....5
1.7 R360....6
1.8 V360....6
2.0 Circulation System....7
3.0 Drains & Hydrostat Kits....9
5.0 LED Pool Lights....13
5.2 Cables w/ Plug....19
5.3 Light Kits....21
6.0 Transformers....29
7.0 Tools & Plumbing Parts....29
Notes....31

IN-FLOOR CLEANING 1.0

1.1 Performance Jets

360° rotating jets evenly distribute cleaning power and increase the circulation of your pool water

Part #	Category	Product Details
11420-BL	Q360 Jet	Blue
11420-BG	Q360 Jet	Beige
11420-BK	Q360 Jet	Black
11420-GR	Q360 Jet	Gray
11420-WT	Q360 Jet	White
11420F-BK	Q360 Jet	Black - Fixed Position
11420F-GR	Q360 Jet	Gray - Fixed Position
11420F-WT	Q360 Jet	White - Fixed Position

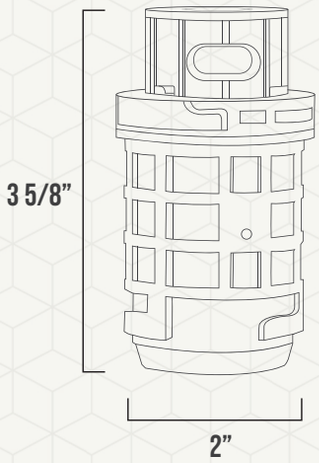

1.2 Jet Collars

- **Tapered collar glues inside 2” schedule 40 PVC pipe**
- **Protective plastering cap included**
- **Water-tight plaster ring prevents leakage**

Part #	Category	Product Details
11400-BL	Q360 Collar	Blue
11400-BG	Q360 Collar	Beige
11400-BK	Q360 Collar	Black
11400-GR	Q360 Collar	Gray
11400-WT	Q360 Collar	White
11401	Q360 Collar	Orange Cap

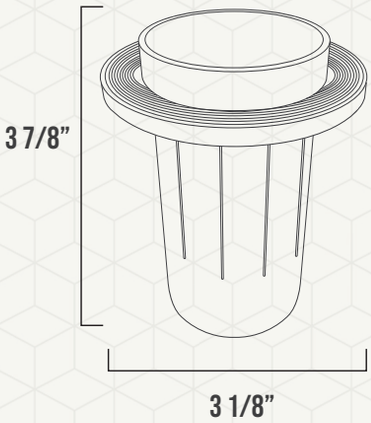

1.3 Jet Parts

Part #	Category	Product Details	Image
11421-BG	Q360+ Jet Nozzles	Q360 Performance Jet Nozzle Small - Beige	
11421-BK		Q360 Performance Jet Nozzle Small - Black	
11421-BL		Q360 Performance Jet Nozzle Small - Blue	
11421-GR		Q360 Performance Jet Nozzle Small - Gray	
11421-WT		Q360 Performance Jet Nozzle Small - White	
11422-BG		Q360 Performance Jet Nozzle Medium - Beige	
11422-BK		Q360 Performance Jet Nozzle Medium - Black	
11422-BL		Q360 Performance Jet Nozzle Medium - Blue	
11422-GR		Q360 Performance Jet Nozzle Medium - Gray	
11422-WT		Q360 Performance Jet Nozzle Medium - White	
11423-BG		Q360 Performance Jet Nozzle Large - Beige	
11423-BK		Q360 Performance Jet Nozzle Large - Black	
11423-BL		Q360 Performance Jet Nozzle Large - Blue	
11423-GR		Q360 Performance Jet Nozzle Large - Gray	
11423-WT		Q360 Performance Jet Nozzle Large - White	
11424-BG		Q360 Performance Jet Nozzle XL - Beige	
11424-BK		Q360 Performance Jet Nozzle XL - Black	
11424-BL		Q360 Performance Jet Nozzle XL - Blue	
11424-GR		Q360 Performance Jet Nozzle XL - Gray	
11424-WT		Q360 Performance Jet Nozzle XL - White	
11425		Square Cut O-Ring	

1.4 Valves

Part #	Category	Product Details	Image
1130100	Q360 Acuator Valve Complete	Smoothly transfers power from the turbine to the ports with minimal friction and back pressure.	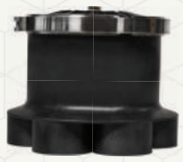
1145110	C5 Valve Adaptor Kit	Replace Caretaker™ or A&A™ 5-port Valve	
1145120	P6 Valve Adaptor Kit	Replace Paramount™ 6-port Valve	

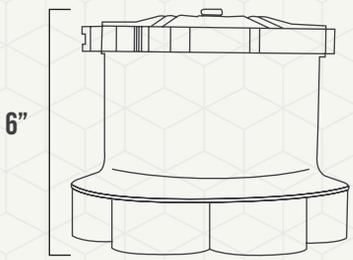

Q360+ Actuator

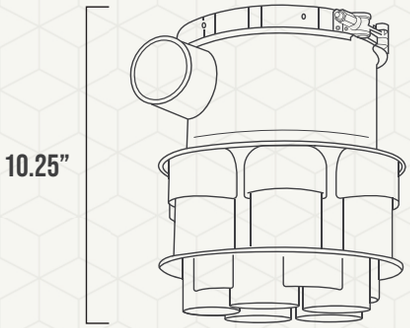

C5 Valve

P6 Valve

1.5 Valve Replacement Parts

Part #	Category	Product Details	Image
1130199	Q360 Replacement Parts	Q360 Valve Body	
1130300	Q360 Replacement Parts	Q360 Gear Cassette	
1130399	Q360 Replacement Parts	Q360 Actuator Turbine	
1130499	Q360 Replacement Parts	Q360 Valve Lid with O-ring	
1130599	Q360 Replacement Parts	Q360 Actuator Band Clamp	
1130699	Q360 Replacement Parts	Nut for Band Clamp	No Image
1130799	Q360 Replacement Parts	Q360 Actuator O-ring	
1130999	Q360 Replacement Parts	Q360 Valve Overhaul Kit - Includes Gear Cassette, Turbine & Lid With O-Ring	

1.6 Abyss Canister Complete

Part #	Category	Product Details
502000	Abyss Canister · Higher capacity · Less maintenance · Easy access · Includes basket	Abyss Debris Canister - Complete
502002		Abyss Canister Lid/Top Replacement
502003		Abyss Canister Basket Replacement
502004		Abyss Canister O-ring Replacement

1.7 R360

Part #	Category	Product Details	Image
1145105	R360 (Replace A&A)	R360 PVC Adapter Sleeve 2” Class 200 to Schd 40	No Image
11620-GR		R360 Retro Head For A&A Quik Clean II - Gray	
11620-WT		R360 Retro Head For A&A Quik Clean II - White	
11650-GR		R360 Retro Head For A&A Gamma 3 Collar - Gray	
11650-WT		R360 Retro Head For A&A Gamma 3 Collar - White	
1145110	R360 (Replace Caretaker)	R360 C5 Valve Adaptor Kit	
11720-GR		R360 Retro Head for Caretaker C99 - Gray	
11720-WT		R360 Retro Head for Caretaker C99 - White	
1145120	R360 (Replace Paramount)	R360 P6 Valve Adaptor Kit	No Image
11520-GR		R360 Retro Head For Paramount PV3 - Gray	
11520-WT		R360 Retro Head For Paramount PV3 - White	
11550-GR		R360 Retro Head For Paramount PCC2000 Jumbo - Gray	
11550-WT		R360 Retro Head For Paramount PCC2000 Jumbo - White	

1.8 V360

Part #	Category	Product Details
111800-BL	V360 (Vinyl & Fiberglass)	V360 Vinyl Collar Fitting - Blue
11800-WT		V360 Vinyl Collar Fitting - White
118099-BG		Q360 Fiberglass Collar Fitting - Beige
118099-BK		Q360 Fiberglass Collar Fitting - Black
118099-BL		Q360 Fiberglass Collar Fitting - Blue
118099-GR		Q360 Fiberglass Collar Fitting - Gray
118099-WT		Q360 Fiberglass Collar Fitting - White

111800-BL

118099-BL

CIRCULATION SYSTEM 2.0

2.0 Circulation System

- Reduces chemical and heat cost, up to 30%, for the life of the pool
- Sweeps dirt & debris from walls and helps to clean steps
- Lengthens the swimming season
- Pushes warm water down and circulates the whole pool
- Eliminates the need for floor returns
- Smooth pressure changes for longer equipment life

Part #	Category	Product Details	Image
11403-GR	e360 Circulation System	E360 Single Nozzle Down Jet - Gray	
11403-WT		E360 Single Nozzle Down Jet - White	
11404-GR		E360 Triple Nozzle Down Jet - Gray	
11404-WT		E360 Triple Nozzle Down Jet - White	
11405-GR		E360 Down Jet Kit - Gray	No Image

DRAINS & HYDROSTAT KITS 3.0

3.0 Drains & Hydrostat Kits

Part #	Category	Product Details	Image
501003-GR	Eclipse Drain	Eclipse Main Drain - Gray	
501003-WT		Eclipse Main Drain - White	
5010032-GR		1/2 Eclipse Drain - Gray- DISPLAY ONLY	No Image
5010032-WT		1/2 Eclipse Drain - White - DISPLAY ONLY	No Image
501004-GR	Full Circle Drain	Full Circle Drain - Gray	
501004-GR		Full Circle Drain - White	No Image
501DD170	InvisiDrain (Deck Drain)	Invisa-Drain Deck Drain 10ft - Tan Top	
501DD180		Invisa-Drain Corner 90 Degree	
501DD190		Invisa-Drain End Adapter (Pair)	
501017	Channel Drain	Channel Drain for Vinyl - Includes White 32” Debris Catcher, Sump & Top Cover	

Eclipse Main Drain - White
501003-WT

Eclipse Main Drain - Gray
501003-GR

Part #	Category	Product Details	Image
501006	Drain Replacement Parts	Eclipse Wrench	
501008-BG		Eclipse Center Logo Cap - Beige	
501008-BK		Eclipse Center Logo Cap - Black	
501008-BL		Eclipse Center Logo Cap - Blue	
501008-GR		Eclipse Center Logo Cap - Gray	
501008-WT		Eclipse Center Logo Cap - White	
501011-GR	Drain Replacement Parts	Full Circle Center Logo Cap - Gray	
501011-WT		Full Circle Center Logo Cap - White	
501012		Eclipse - Center Plaster Cap	
501013		Eclipse Outer Plaster Shield	
501014-GR		Full Circle Drain Cover - Gray	
501014-WT		Full Circle Drain Cover - White	
501015		Eclipse Drain Cover Screws	No Image
501016		Full Circle Outer Plaster Shield	

Part #	Category	Product Details	Image
501005-GR	Hydrostat Kits & Parts	Hydrostat Kit - Gray	
501005-WT		Hydrostat Kit - White	
501009-BG		Hydrostat Cap - Beige	
501009-BK		Hydrostat Cap - Black	
501009-BL		Hydrostat Cap - Blue	
501009-GR		Hydrostat Cap - Gray	
501009-WT		Hydrostat Cap - White	
501010		Hydrostat Valve	

LED POOL LIGHTS 5.0

5.0 Spectrum™ 360

Spectrum™ 360 lights are extremely energy-efficient and long lasting. The entire system is extra-low-voltage ensuring safety at all times.

Part #	Category	Product Details
200040-BL	Spectrum™ 360	Spectrum™ 360 LED Light - Blue
200041-WT		Spectrum™ 360 LED Light - White
200043-P		Spectrum™ 360 LED Light - Multi-Colored - Pentair
200044-J		Spectrum™ 360 LED Light - MultiColor - Jandy/Wall Switch
200045-H		Spectrum™ 360 LED Light - Multi-Colored - Hayward
200046-WW		Spectrum™ 360 LED Light - Warm White
200047-T		Spectrum™ 360 LED Light - Amber FFWCC Turtle Compliant

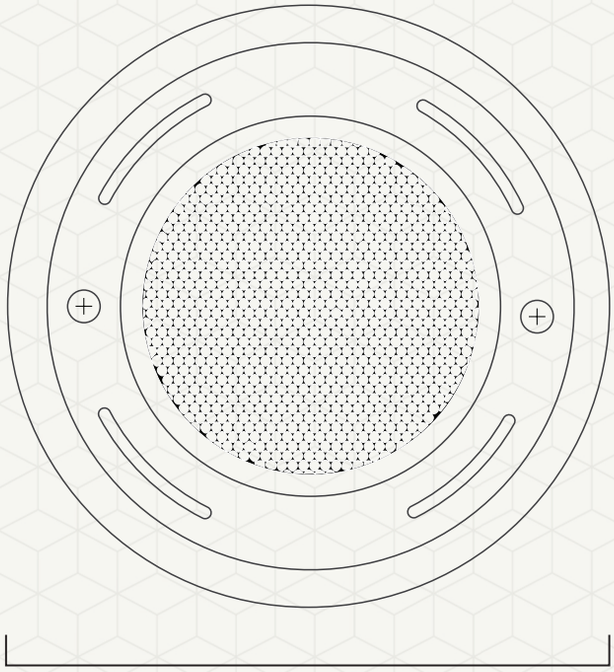

NEW!

Spectrum™ 360 Nicheless

Spectrum 360 lights are extremely energy-efficient and long lasting. The entire system is extra-low-voltage ensuring safety at all times.

Part #	Category	Product Details	Image
300080-BL	Spectrum™ 360 NICHELESS LED Light (NEW)	Blue	2”
300081-WT		White	
300083-P		Multi-Color - Pentair	
300084-J		Multi-Color - Jandy/Wall	
300085-H		Multi-Color - Hayward	
300086-WW		Warm White	
300087-T		Amber (Turtle-Friendly)	

Vivid 360™ Nicheless

Engineered to replace most existing pool and spa lights to deliver more colorful and vivid lighting than ever before.

Part #	Category	Product Details	Image
300070-BL	Vivid 360™ Nicheless LED Light	Blue	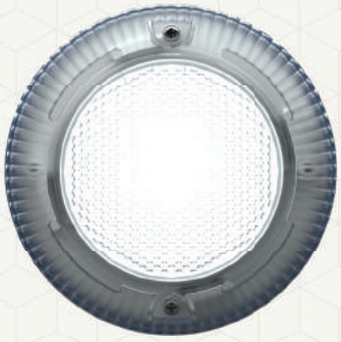 5”
300070-BL		White	
300073-P		Multi-Color - Pentair	
300074-J		Multi-Color - Jandy/Wall	
300075-H		Multi-Color - Hayward	
300076-WW		Warm White	
300077-T		Amber (Turtle-Friendly)	

Vivid 360™ Retro Pool

Engineered to replace most existing pool lights to deliver more colorful and vivid lighting than ever before.

Part #	Category	Product Details
VLP1004-BL	Vivid 360™ Retro Pool LED Light	Vivid 360™ Retro Pool Light 30W - Blue
VLP1008-BL		Vivid MAX 360 Retro Pool Light 60W - Blue
VLP2004-WT		Vivid 360™ Retro Pool Light 30W - White
VLP2008-WT		Vivid MAX 360 Retro Pool Light 60W - White
VLP2014-WW		Vivid 360™ Retro Pool Light 30W - Warm White
VLP2018-WW		Vivid MAX 360 Retro Pool Light 60W - Warm White
VLP3000-H		Vivid MAX 360 Retro Pool Light 60W - Multicolor - Hayward
VLP3000-J		Vivid MAX 360 Retro Pool Light 60W - Multicolor - Jandy/Wall Switch
VLP3000-P		Vivid MAX 360 Retro Pool Light 60W - Multicolor - Pentair
VLP3030-H		Vivid 360™ Retro Pool Light 30W - Multicolor - Hayward
VLP3030-J		Vivid 360™ Retro Pool Light 30W - Multicolor - Jandy/Wall Switch
VLP3030-P		Vivid 360™ Retro Pool Light 30 W - Multicolor - Pentair
VLP3030-T		Vivid 360™ Retro Pool Light 30W - Amber FFWCC Turtle Compliant

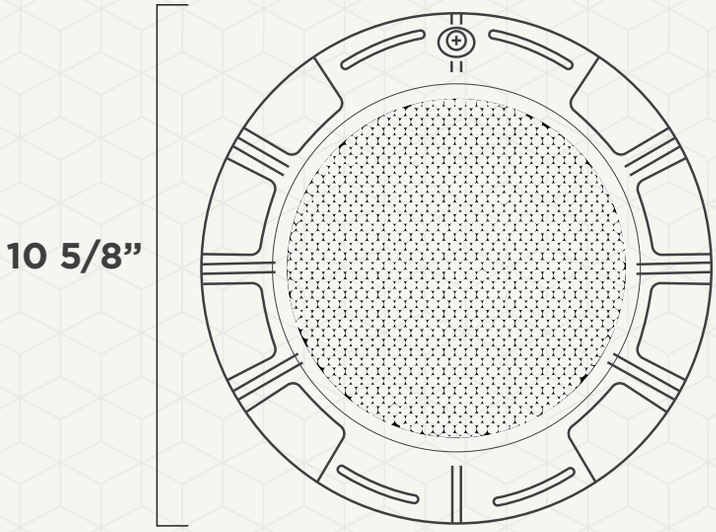

Vivid 360™ Retro Spa

Engineered to replace most existing spa lights to deliver more colorful and vivid lighting than ever before

Part #	Category	Product Details
VLS4000-P	Vivid 360™ Retro Spa LED Light	Vivid 360 Retro Spa Light - Multicolor - Pentair
VLS4000-J		Vivid 360 Retro Spa Light - Multicolor - Jandy/Wall Switch
VLS4000-H		Vivid 360 Retro Spa Light - Multicolor - Hayward
VLS4000-T		Vivid 360 Retro Spa Light - Multicolor - Amber FFWCC Turtle Compliant
VLS4004-WT		Vivid 360 Retro Spa Light - White
VLS4008-BL		Vivid 360 Retro Spa Light - Blue
VLS4014-WW		Vivid 360 Retro Spa Light - Warm White

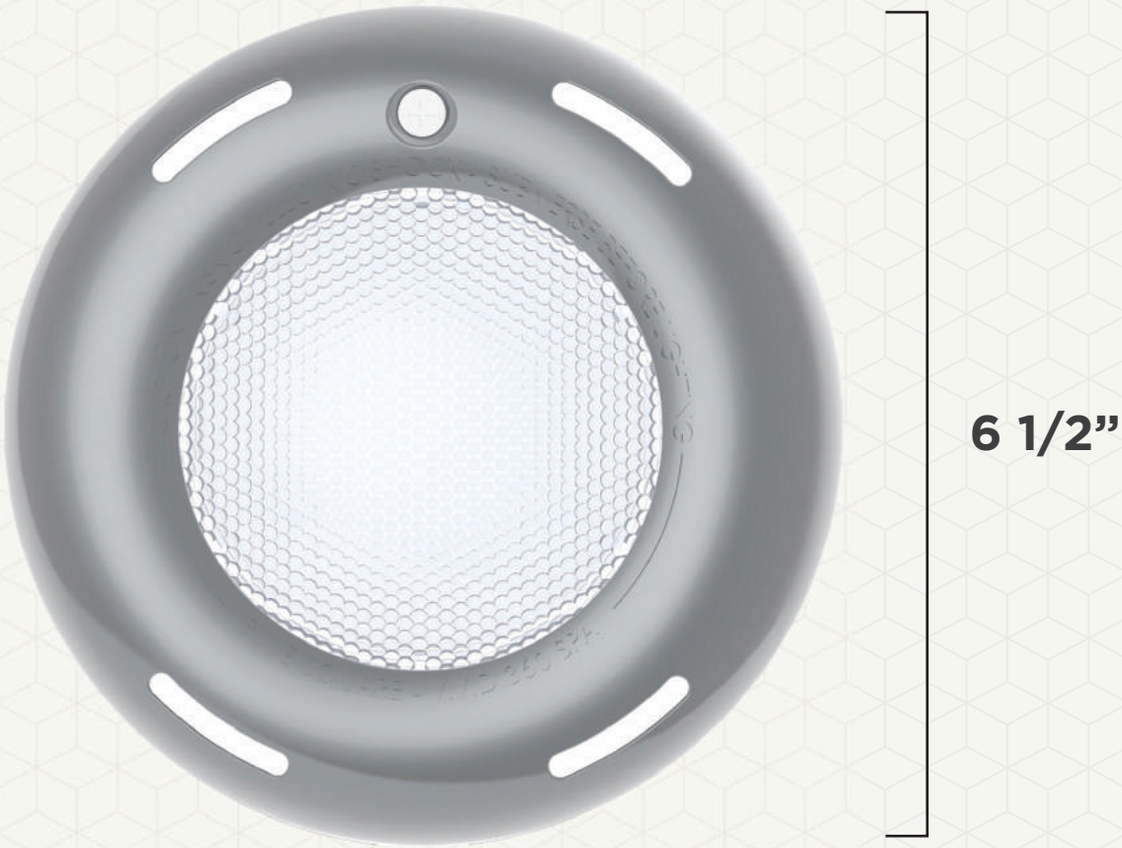

CABLES W/ PLUG 5.2

5.2 Cables w/ Plug

Part #	Category	Product Details
200050	Spectrum / Vivid 360 Spa Cables (w/ Plug)	Spectrum 360 / Vivid 360 Spa - 50ft Cable (18 AWG)
200100		Spectrum 360 / Vivid 360 Spa - 100ft Cable (18 AWG)
200150		Spectrum 360 / Vivid 360 Spa - 150ft Cable (18 AWG)
210150		Spectrum 360 / Vivid 360 Spa - 150ft Cable (14 AWG)
300050	Vivid Nicheless Cables (w/ Plug)	Vivid 360 Nicheless - 50ft Cable (18 AWG)
300100		Vivid 360 Nicheless - 100ft Cable (18 AWG)
300200		Vivid 360 Nicheless 200ft Cable
400050	Vivid Pool Cables (w/ Plug)	Vivid 360 Retro Pool 50ft Cable - 14 AWG
400100		Vivid 360 Retro Pool LED 100ft Cable - 14 Gauge
400100-MAX		Vivid 360 Retro Pool LED 100ft Cable - 12 Gauge MAX
400150		Vivid 360 Retro Pool LED 150ft Cable - 14 Gauge
400150-MAX		Vivid 360 Retro Pool LED 150ft Cable - 12 Gauge Max
400200-MAX		Vivid 360 Retro Pool LED 200t Cable - 12 Gauge MAX

LIGHT KITS 5.3

Spectrum™ 360 Light Kits

Includes Niche, Cable w/ Plug, and Light

Part #	Category	Product Details	Image
K1000-BL	Spectrum™ 360 LED Light Kits	50ft Light Kit – Blue	
K1001-WT		50ft Light Kit – White	
K1018-WW		50ft Light Kit - Warm White	
K1015-T		50ft Light Kit - Turtle	
K1002-P		50ft Light Kit - Pentair	
K1003-J		50ft Light Kit - Jandy/Wall	
K1004-H		50ft Light Kit - Hayward	
K1005-BL		100ft Light Kit - Blue	
K1006-WT		100ft Light Kit - White	
K1019-WW		100ft Light Kit - Warm White	
K1009-H		100ft Light Kit - Turtle	
K1007-P		100ft Light Kit - Pentair	
K1008-J		100ft Light Kit - Jandy/Wall	
K1008-J		100ft Light Kit - Hayward	
K1010-BL		150ft Light Kit - Blue	
K1011-WT		150ft Light Kit - White	
K1020-WW		150ft Light Kit - Warm White	
K1017-T		150ft Light Kit - Turtle	
K1010-BL		150ft Light Kit - Pentair	
K1013-J		150ft Light Kit - Jandy/Wall	
K1014-H		150ft Light Kit - Hayward	

Spectrum™ 360 Nicheless Light Kits

Includes Return fitting, Cable w/ Plug, and Light

Part #	Category	Product Details	Image
K5000-BL	Spectrum™ 360 Nicheless LED Light Kits	50ft Light Kit – Blue	
K5001-WT		50ft Light Kit – White	
K5018-WW		50ft Light Kit - Warm White	
K5015-T		50ft Light Kit - Amber (Turtle-Friendly)	
K5002-P		50ft Light Kit - Multi-Color - Pentair	
K5003-J		50ft Light Kit - Multi-Color - Jandy/Wall	
K5004-H		50ft Light Kit - Multi-Color - Hayward	
K5005-BL		100ft Light Kit - Blue	
K5006-WT		100ft Light Kit - White	
K5019-WW		100ft Light Kit - Warm White	
K5016-T		100ft Light Kit - Amber (Turtle-Friendly)	
K5007-P		100ft Light Kit - Multi-Color - Pentair	
K5008-J		100ft Light Kit - Multi-Color - Jandy/Wall	
K5009-H		100ft Light Kit - Multi-Color - Hayward	
K5010-BL		150ft Light Kit - Blue	
K5011-WT		150ft Light Kit - White	
K5020-WW		150ft Light Kit - Warm White	
K5017-T		150ft Light Kit - Amber (Turtle-Friendly)	
K5012-P		150ft Light Kit - Multi-Color - Pentair	
K5013-J		150ft Light Kit - Multi-Color - Jandy/Wall	
K5014-H		150ft Light Kit - Multi-Color - Hayward	

Vivid 360™ Nicheless Light Kits

Thanks to Vivid 360™ plug kits, in most cases new lighting can be installed using existing lighting cable — eliminating the need to pull new cable and simplifying installation

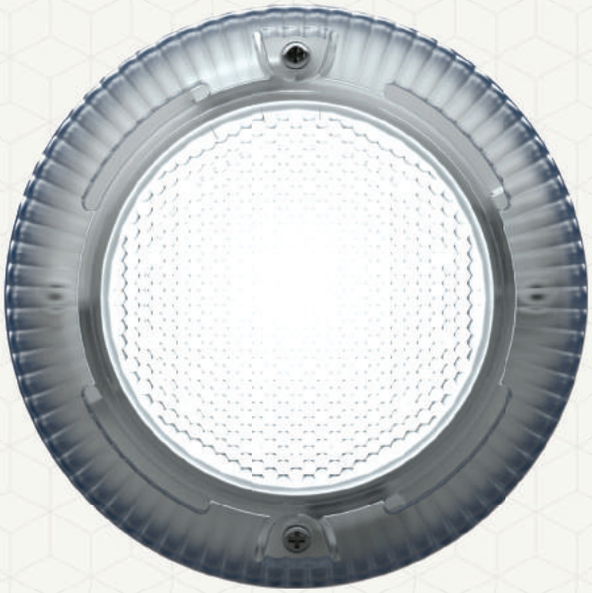

Part #	Category	Product Details
K2000-BL	Vivid 360™ Nicheless Light Complete Kits	50ft Light Kit – Blue
K2001-WT		50ft Light Kit – White
K2002-P		50ft Light Kit - Multi-Color - Pentair
K2003-J		50ft Light Kit - Multi-Color - Jandy/Wall
K2004-H		50ft Light Kit - Multi-Color - Hayward
K2005-BL		100ft Light Kit - Blue
K2006-WT		100ft Light Kit - White
K2007-P		100ft Light Kit - Multi-Color - Pentair
K2008-J		100ft Light Kit - Multi-Color - Jandy/Wall
K2009-H		100ft Light Kit - Multi-Color - Hayward
K2009-H		150ft Light Kit - Blue
K2011-WT		150ft Light Kit - White
K2012-P		150ft Light Kit - Multi-Color - Pentair
K2013-J		150ft Light Kit - Multi-Color - Jandy/Wall
K2014-H		150ft Light Kit - Multi-Color - Hayward

Vivid 360™ Retro Pool Light Kits

30W and 60W; Includes Light, and Cable w/ Plug

Part #	Category	Product Details
K3000-WT	Vivid 360™ Retro Pool Light Kits	50ft Light Kit - White 30W
K3001-WT		MAX 50ft Light Kit - White 60W
K3027-BL		50ft Light Kit - Blue 30W
K3004-BL		MAX 50ft Light Kit - Blue 60W
K3002-WW		50ft Light Kit - Warm White 30W
K3003-WW		MAX 50ft Light Kit - Warm White 60W
K3026-P		50ft Light Kit Multi-Color - Pentair 30W
K3005-P		MAX 50ft Light Kit Multi-Color - Pentair 60W
K3025-J		50ft Light Kit Multi-Color - Jandy/Wall 30W
K3006-J		MAX 50ft Light Kit Multi-Color - Jandy/Wall 60W
K3024-H		50ft Light Kit Multi-Color - Hayward 30W
K3007-H		MAX 50ft Light Kit Multi-Color - Hayward 60W
K3008-WT		100ft Light Kit - White 30W
K3009-WT		MAX 100ft Light Kit - White 60W
K3031-BL		100ft Light Kit - Blue 30W
K3012-BL		MAX 100ft Light Kit - Blue 60W

Part #	Category	Product Details
K3010-WW	Vivid 360™ Retro Pool Light Kits	100ft Light Kit - Warm White 30W
K3011-WW		MAX 100ft Light Kit - Warm White 60W
K3030-P		100ft Light Kit Multi-Color - Pentair 30W
K3013-P		MAX 100ft Light Kit Multi-Color - Pentair 60W
K3029-J		100ft Light Kit Multi-Color - Jandy/Wall 30W
K3014-J		MAX 100ft Light Kit Multi-Color - Jandy/Wall 60W
K3028-H		100ft Light Kit Multi-Color - Hayward 30W
K3015-H		MAX 100ft Light Kit Multi-Color - Hayward 60W
K3016-WT		150ft Light Kit - White 30W
K3017-WT		MAX 150ft Light Kit - White 60W
K3035-BL		150ft Light Kit - Blue 30W
K3035-BL		150ft Light Kit - Blue 60W
K3018-WW		150ft Light Kit - Warm White 30W
K3019-WW		MAX 150ft Light Kit - Warm White 60W
K3034-P		150ft Light Kit Multi-Color - Pentair 30W
K3021-P		MAX 150ft Light Kit Multi-Color - Pentair 60W
K3033-J		150ft Light Kit Multi-Color - Jandy/Wall 30W
K3022-J		MAX 150ft Light Kit Multi-Color - Jandy/Wall 60W
K3032-H		150ft Light Kit Multi-Color - Hayward 30W
K3023-H		MAX 150ft Light Kit Multi-Color - Hayward 60W

Vivid 360™ Retro Spa Light Kits

Includes Light,
and Cable w/ Plug

Part #	Category	Product Details
K4000-BL	Vivid 360™ Retro Spa Light Kits	50ft Light KIT - Blue
K4001-WT		50ft Light KIT - White
K4002-P		50ft Light KIT Multi-Color - Pentair
K4003-J		50ft Light KIT Multi-Color - Jandy/Wall
K4004-H		50ft Light KIT Multi-Color - Hayward
K4005-BL		100ft Light KIT - Blue
K4006-WT		100ft Light KIT - White
K4007-P		100ft Light KIT Multi-Color - Pentair
K4008-J		100ft Light KIT Multi-Color - Jandy/Wall
K4009-H		100ft Light KIT Multi-Color - Hayward
K4010-BL		150ft Light KIT - Blue
K4011-WT		150ft Light KIT - White
K4012-P		150ft Light KIT Multi-Color - Pentair
K4013-J		150ft Light KIT Multi-Color - Jandy/Wall
K4014-H		150ft Light KIT Multi-Color - Hayward

Light Parts

Part #	Category	Product Details
1145300-GR	Light Parts	1.5” PVC Return Fitting - Gray
1145300-WT		1.5” PVC Return Fitting - White
1145301		Return Fitting Plaster Cap
1145302		Spectrum 360 Nicheless Light Install Tool
200000-GR		Spectrum 360 6.5” Niche Assembly Complete - Gray
200000-WT		Spectrum 360 6.5” Niche Assembly Complete - White
200029		Niche for Spectrum 360 Rear Port
200030		Niche for Spectrum 360 Side Port
200032-GR		Spectrum 360 Plaster Ring - Gray
200032-WT		Spectrum 360 Plaster Ring - White
200034		Spectrum 360 Extended Plaster Ring
200035		M1 Adhesive
300003		Vivid 360 Nicheless GloBrite Adapter
400010		Shallow Niche Adapter

Plug & Screw Kits

Part #	Category	Product Details	Image
200036	Plug & Screw Kits	Spectrum™ 360 Screw Kit	No Image
200038		Spectrum™ 360 Plug Kit	
300000		Vivid 360™ Nichless Retro Plug Kit	
400001		Vivid 360™ Pool/Spa Retro Plug Kit	

TRANSFORMERS 6.0

TOOLS & PLUMBING PARTS 7.0

Part #	Category	Product Details
600050	Transformers	Intermatic - PX50 Transformer
600100		Intermatic - PX100 Transformer
600300		Intermatic - PX300 Transformer
600600		Intermatic - PX600 Transformer

Part #	Category	Product Details
1145096	Tools & Plumbing Parts	Pro Tool #3 - Jumbo Retro
1145098		Pro Tool #2
1145100		Pro Tool #1 - Blue Square
1145101		Y-Pipe
1145103		Pro Tool #1 Machined
1145106		Q360 Collar Reamer
1145108		R360 Pro Tool #2-Stainless
1145109		Pro Tool #2 Machined
1145201		S-Pipe
501006		Eclipse Wrench
501007		2” Threaded Pressure Plug

Notes

BLUE SQUARE®

www.bluesquaremfg.com

Corporate Headquarters:
3344 N Nevada Street
Chandler, AZ 85225

Office Phone: 480.612.6880
Toll-Free Phone: 800.277.4150
Email: info@bluesquaremfg.com